TECO

OUTLINE DIMENSIONS
3-PHASE INDUCTION MOTOR

FRAME NO : D100L

POLE	kW	HP	RPM	L	FRAME
2	3	4	2900	366	D100L-2
4	2.2	3	1450	366	D100L1-4
4	3	4	1450	384	D100L2-4
6	1.5	2	950	384	D100L-6
8	0.70/1.1	0.9/1.5	710	366	D100L1-8

Totally Enclosed Fan-Cooled Type. Squirrel-Cage Rotor.

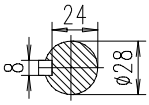

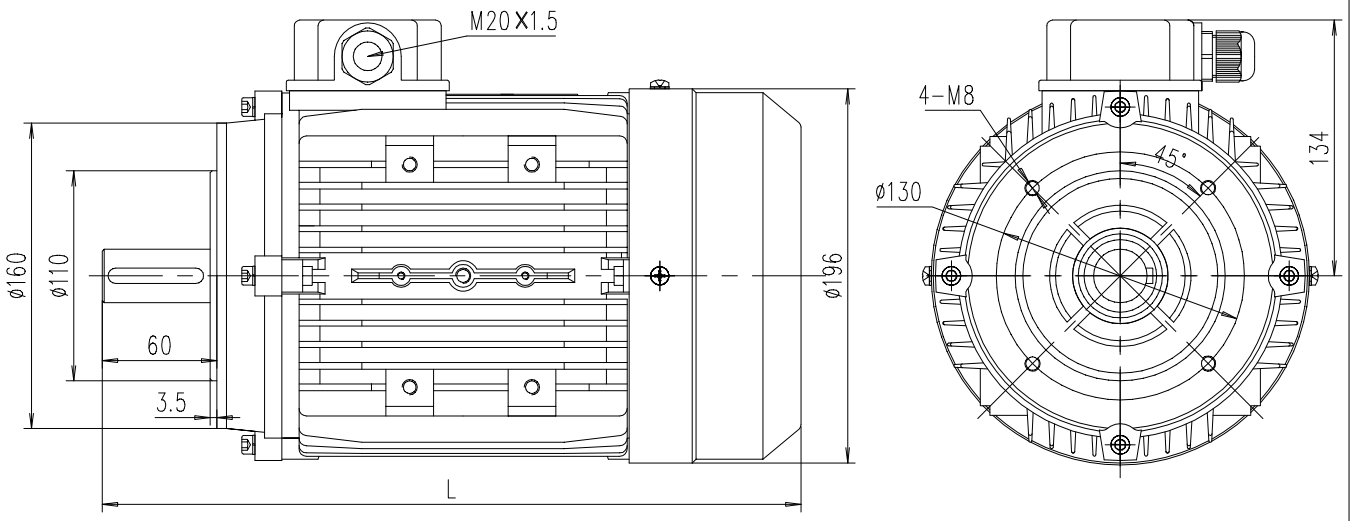

NOTES:
1. DIMENSIONS IN mm.
2. FLANGE MOUNTED IM3601.
3. IP55 PROTECTION.

MAX ALLOY

DWN.	LL	02. 06. 25	REV : 00
CHKD.	DP	02. 06. 25	
APPD.	JC	02. 06. 25	